AO-40 24GHz Operations

The Challenge

An Outsider’s Perspective

By KD4APP – AMSAT 33535

A0-40 24GHz News

----- Original Message -----
From: "Stacey E. Mills" <w4sm@cstone.net>
To: "Amsat Bulletin Board" <amsat-bb@AMSAT.Org>
Sent: Sunday, **September 09, 2001 10:09 PM**
Subject: [amsat-bb] AO-40, K-band Tx Test Successful!

On Orbit 396, MA=118 to 138, the K-band (24.048 GHz) transmitter was active and connected to the same inputs as the S2 transmitter. The passband and beacon were first detected by Petra G4KGC (radio op) and Charlie Suckling G3WDG (dish op) at 1930 utc, MA=122. Shortly thereafter the beacon and passband were also detected by Michael Fletcher, OH2AUE. The Suckling's used a 22 cm offset dish and reported signals 6 dB above the noise floor. Michael used a 60 cm dish and reported that the beacon was 7 db above the noise floor under less than ideal conditions with overcast skies and occasional rain. Both used linear feeds and reported good, stable signals except for cyclic deep fades due to the linear polarization of the K-Tx antenna, the linear polarization of their feeds, and the rotation of AO-40. A circularly polarized feed should eliminate these spin fades.

The command team is delighted to report this additional functional transmitter on AO-40!!!

---W4SM for the AO-40 Command Team

--

Stacey E. Mills, W4SM WWW: http://www.cstone.net/~w4sm/ham1.html
Charlottesville, VA PGP key: http://www.cstone.net/~w4sm/key

From: <michael.fletcher@oh2aue.pp.fi>
To: <amsat-bb@AMSAT.Org>
Sent: **Monday, September 17, 2001 6:27 PM**
Subject: [amsat-bb] K band - great signals !

Hi all,

making measurements on the K band TX again tonight. More on the reults later after further analysis. The TX is operating very well indeed. This time I was using a 120 cm prime focus dish with an additional flexible waveguide section presenting an additional loss of 1.3 dB. The MB was now peaking at 15 dB C/N in a 1 kHz bandwidth. This 5 dB better than with my 60 cm dish and is what to expect from theory and taking the additional WG section loss into account. Polarisation is still linear, but now there is sufficient C/N to allow the sacrifice of 3 dB for the benefit of getting rid of the spin modulation. How I wish I had more spare time ;-)

Pointing is still manageable, but having to track the satellite and Doppler manually keeps you pretty busy ;-)

Lots of stations on the band, DB6NT, ON4AOD, G3WDG and many, many others. Lots of fun, even though this time I only had time to listen.

Michael, OH2AUE

AO-40 24GHz Operators

- G3WDG and G4KGC
  - Charlie & Petra
- OH2AUE
  - Michael Fletcher
- F6GBQ
  - Jean Michel
- DB6NT
  - Michael Kuhne
- W5LUA
  - Al Ward III
- VK5NC & VK5DK
- Others????

AMSAT-Belgium

Home of the K-band transponder

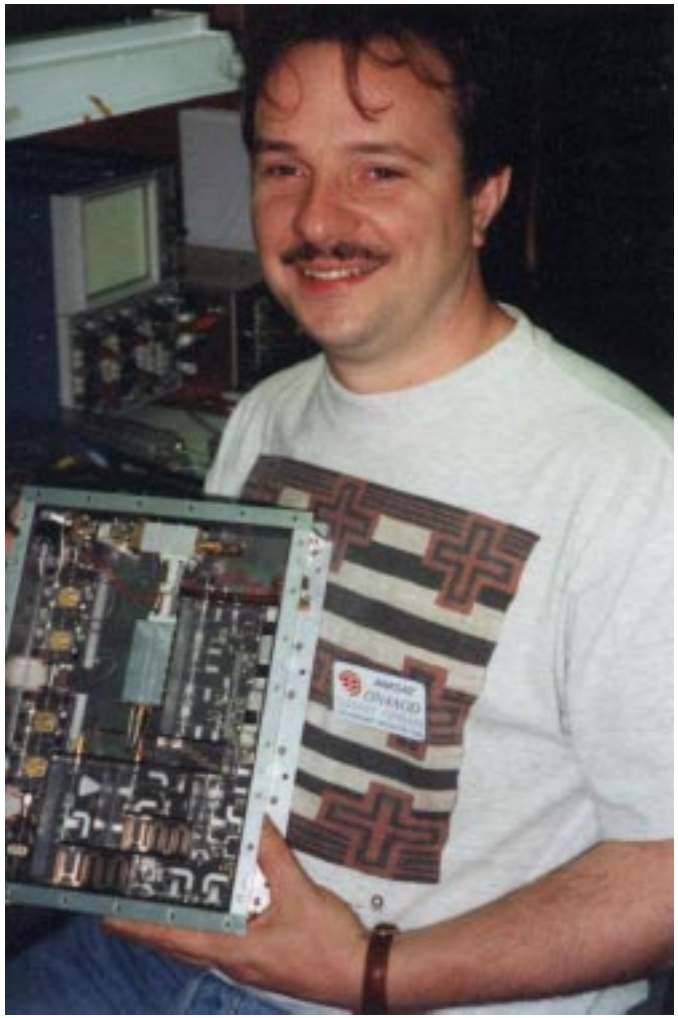

Danny Orban, (AMSAT-Belgium) ON4AOD, poses with the fruits of his labors - the 24 GHz final amplifier for Phase 3D. Danny was performing final bench testing of the transmitter at the Phase 3D Lab in Orlando, Florida.

Antenna

Although a disk looks promising, there is a problem with the feed.Both horn and waveguide feeds are mechanically weak and might not survive the launch.A Cassegrain feed is good but not suited for this small dish.The hyberboloid would block too much of the primary reflector and thus reduce efficiency.

A horn with a 13.7 degrees beamwidth at -3dB, a gain of about 23 dB, would have an aperture of 7 by 10 cm and a length of 22 cm. We have the flight version of the horn.It is a 26.5 dB gain horn. It is compensated for equal E and H planes and reduced sidelobes.Because of this the -3 dB points are close to those of the 23 dB horn.Also, with 40 cm of length, the feed point is close to the bottom of the module where the output is.This saves on coax.

AMSAT-Belgium

Home of the K-band transponder

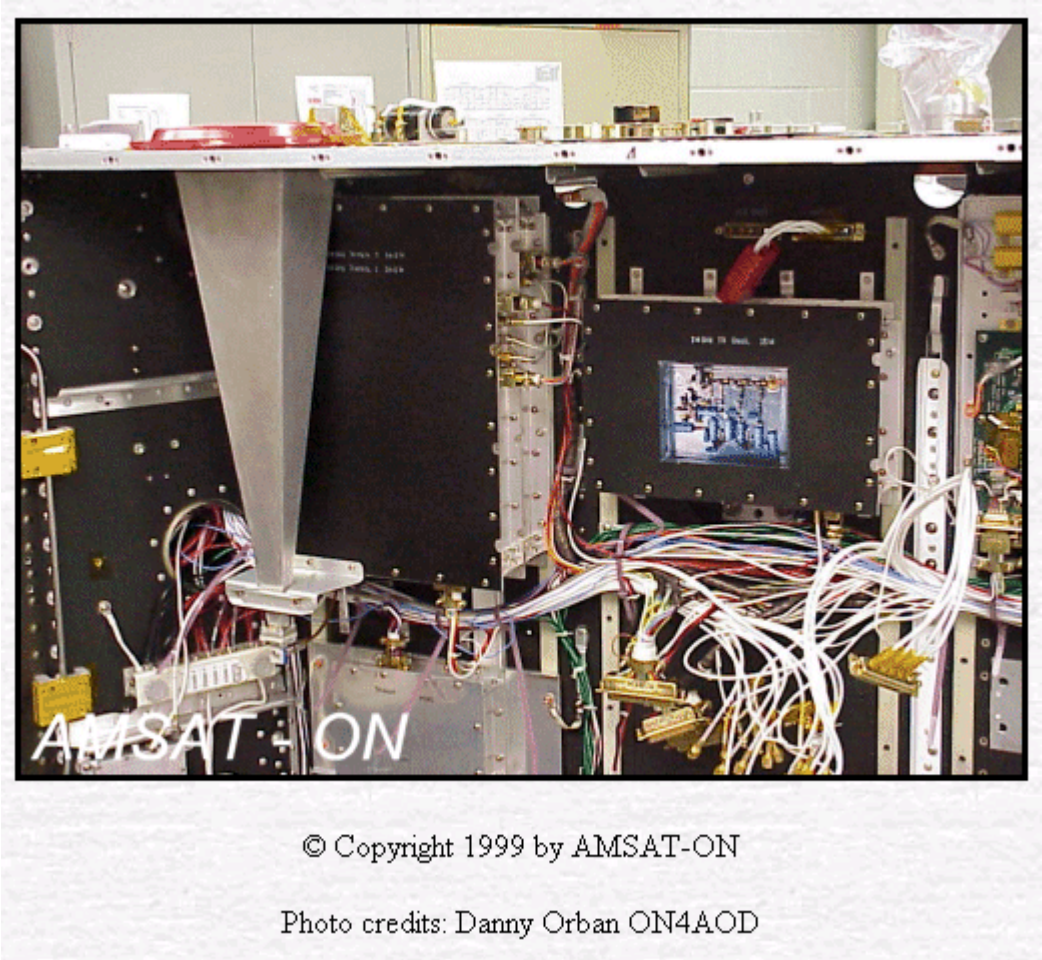

24GHz Transponder – small module is the LO

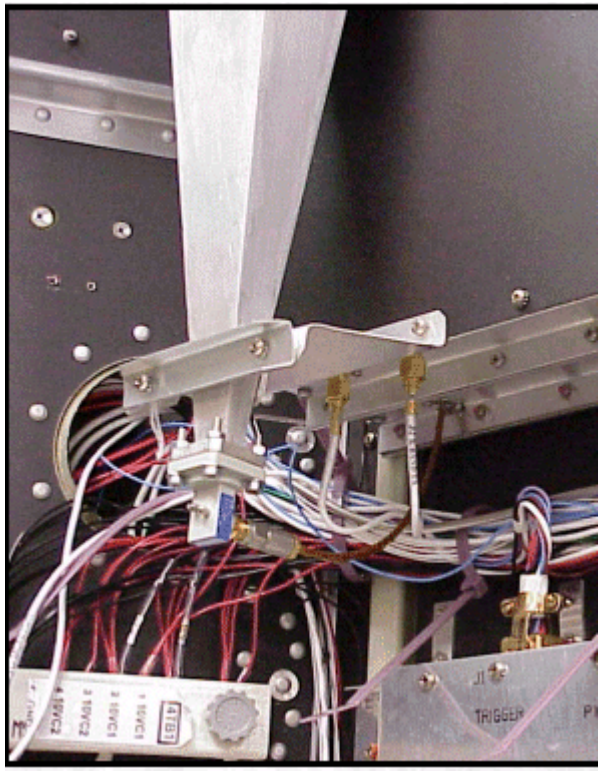

24GHz horn antenna

AMSAT-Belgium

Home of the K-band transponder

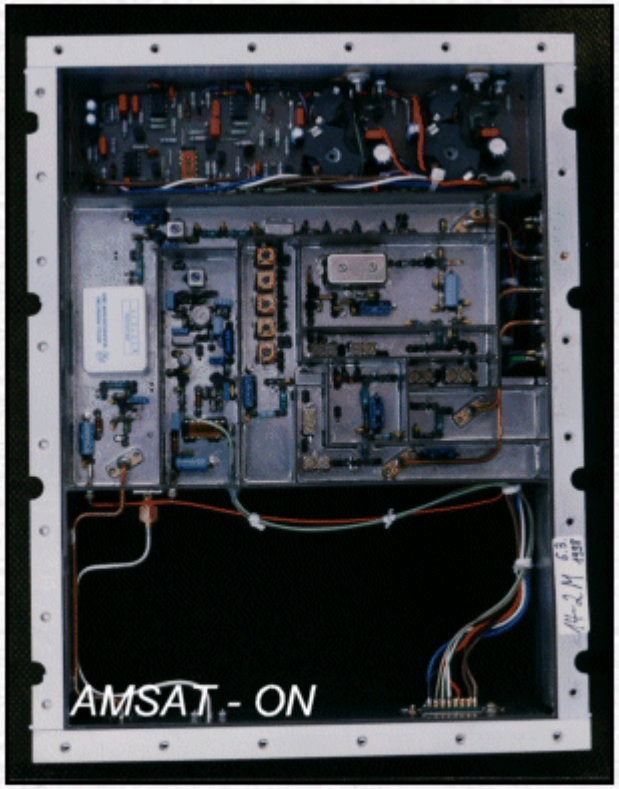

Power supply and first IF module

Oscillator

The oscillator generates a 65 MHz LO signal.The circuit sits in a separate box to avoid heat transfer from other components.

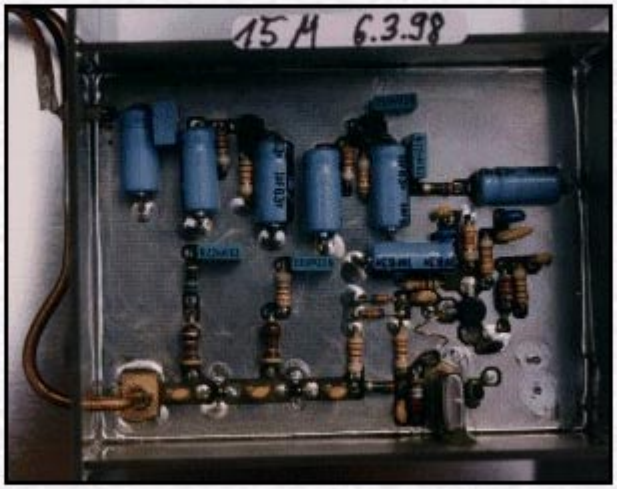

Local Oscillator Module

K-Band Horn

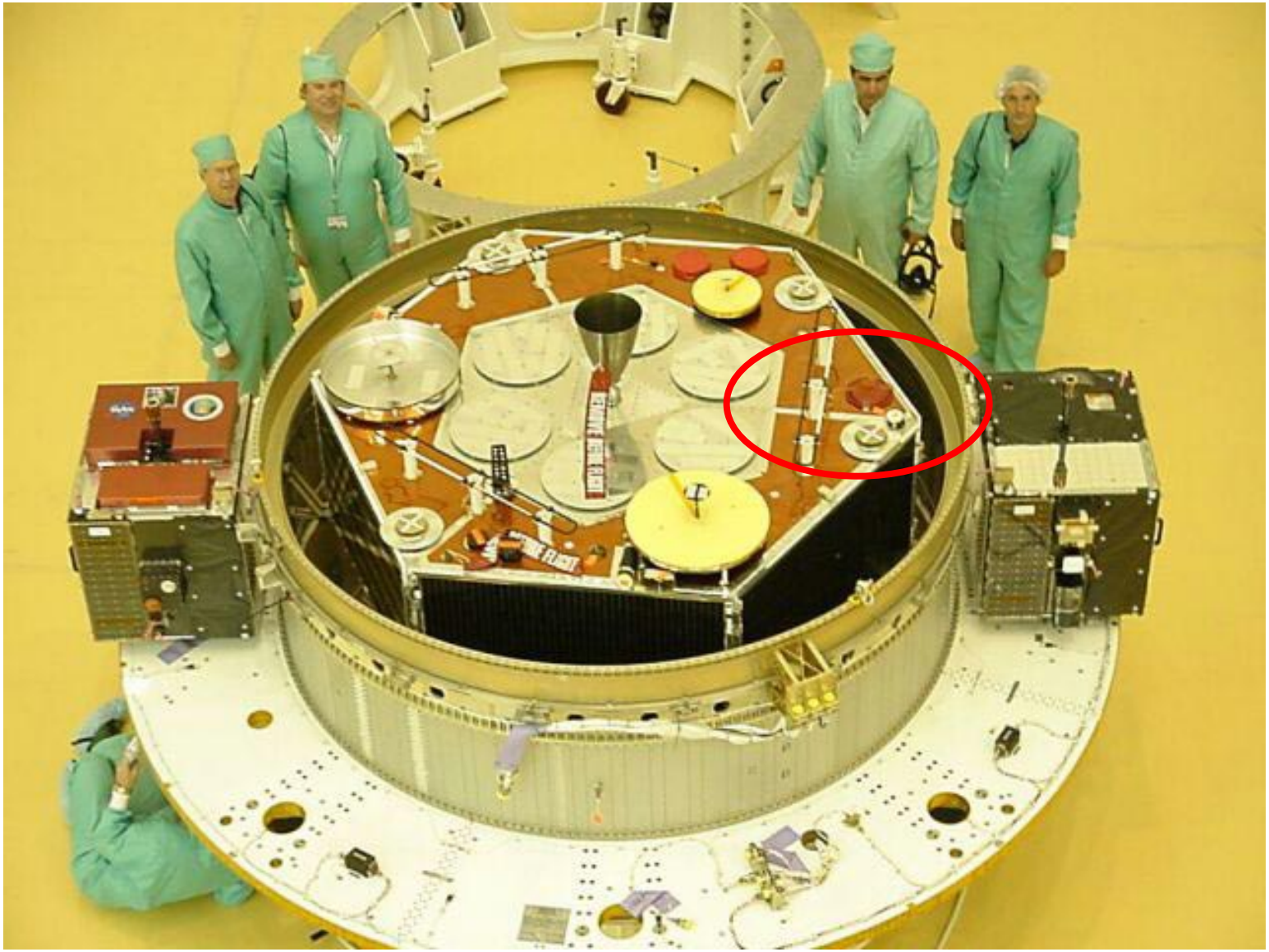

K-Band Horn

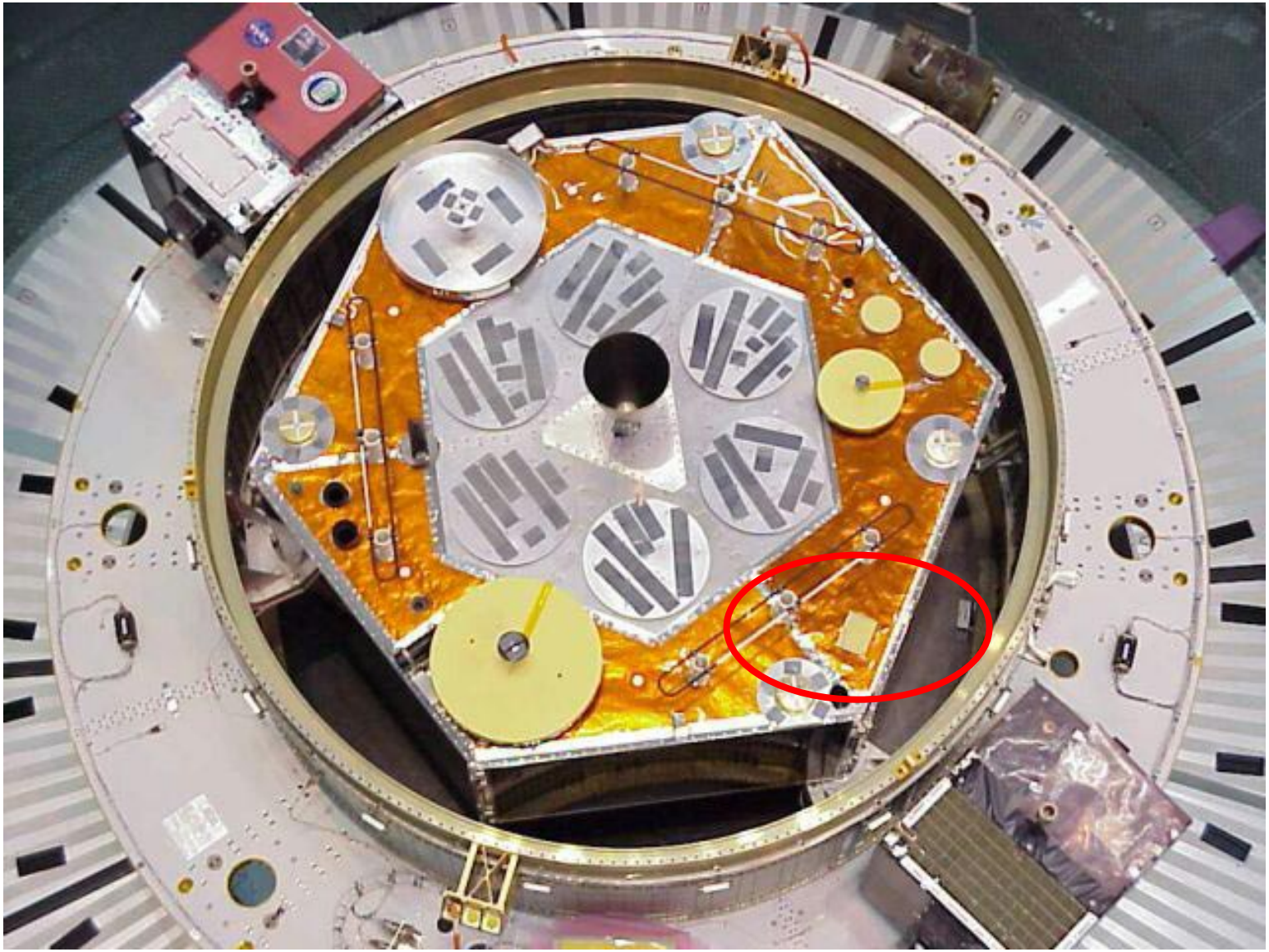

K-Band Horn and transponder

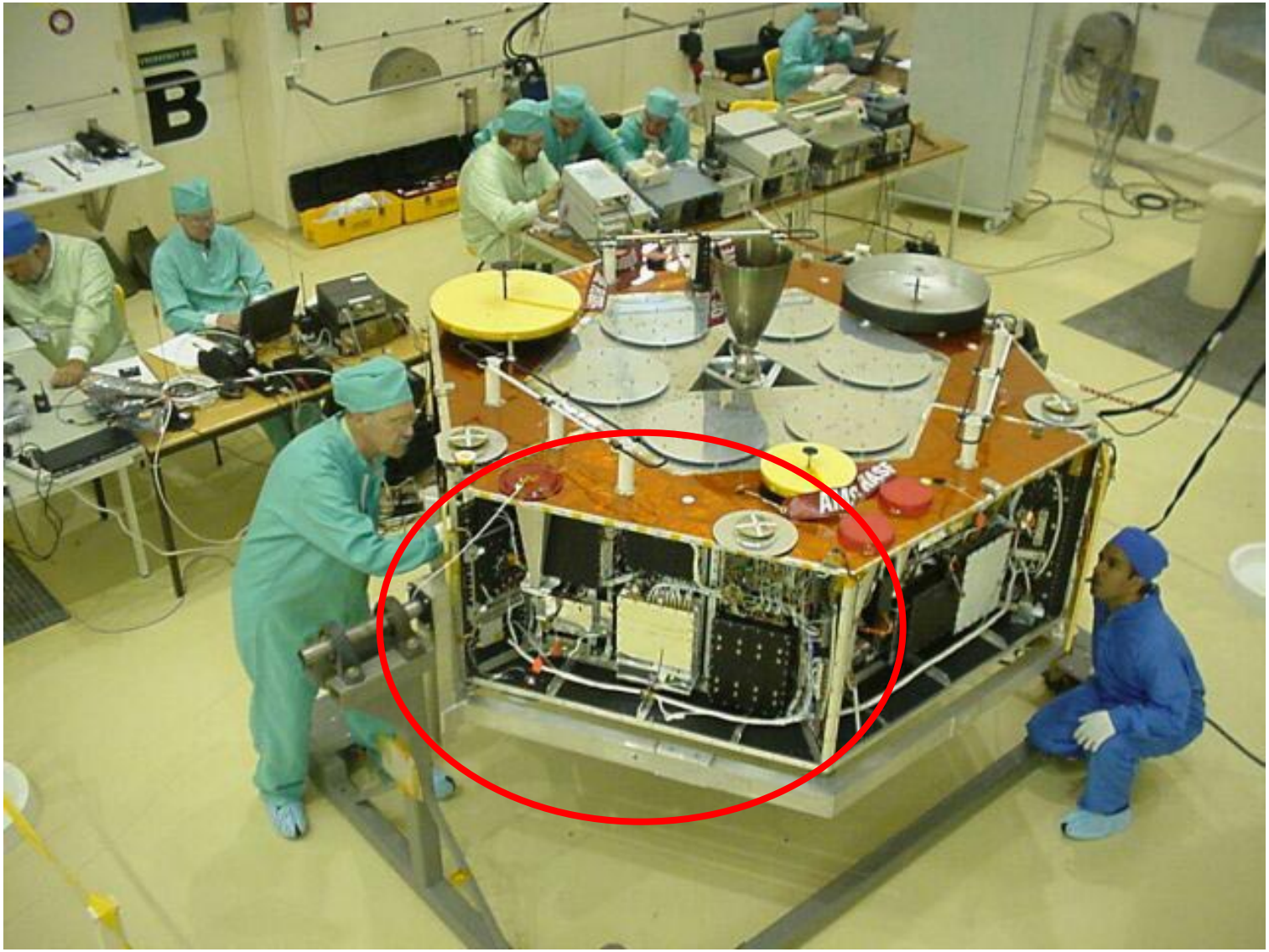

Top left to right: Bdale Garbee, KB0G, Jim White, WD0E, Michael Fletcher, OH2AUE, Mirek Kasal, OK2AQK, Freddie DeGuchteneire, ON6UG, Stacey Mills, W4SM, bottom left to right: Dick Daniels, W4PUJ, Jay Ramdas, nocall

G3WDG and G4KGC

22cm & 60cm Dishes for 24GHz

Circular
Feed

G3WDG and G4KGC

Wednesday, October 03, 2001 3:00 AM

Tests with the underilluminated 10ft dish last night were very promising, with a big lift in signals, transponder noise observed for the first time (about 3dB) and near solid telemetry. Finding the satellite was no problem - careful peaking of the dish on S-Band was enough to find some passband signals on K-Band. Dish needed updating about once a minute.

OH2AUE 60cm dish for 24GHz

OH2AUE
120cm Dish for 24GHz

OH2AUE 24GHz Block Diagram

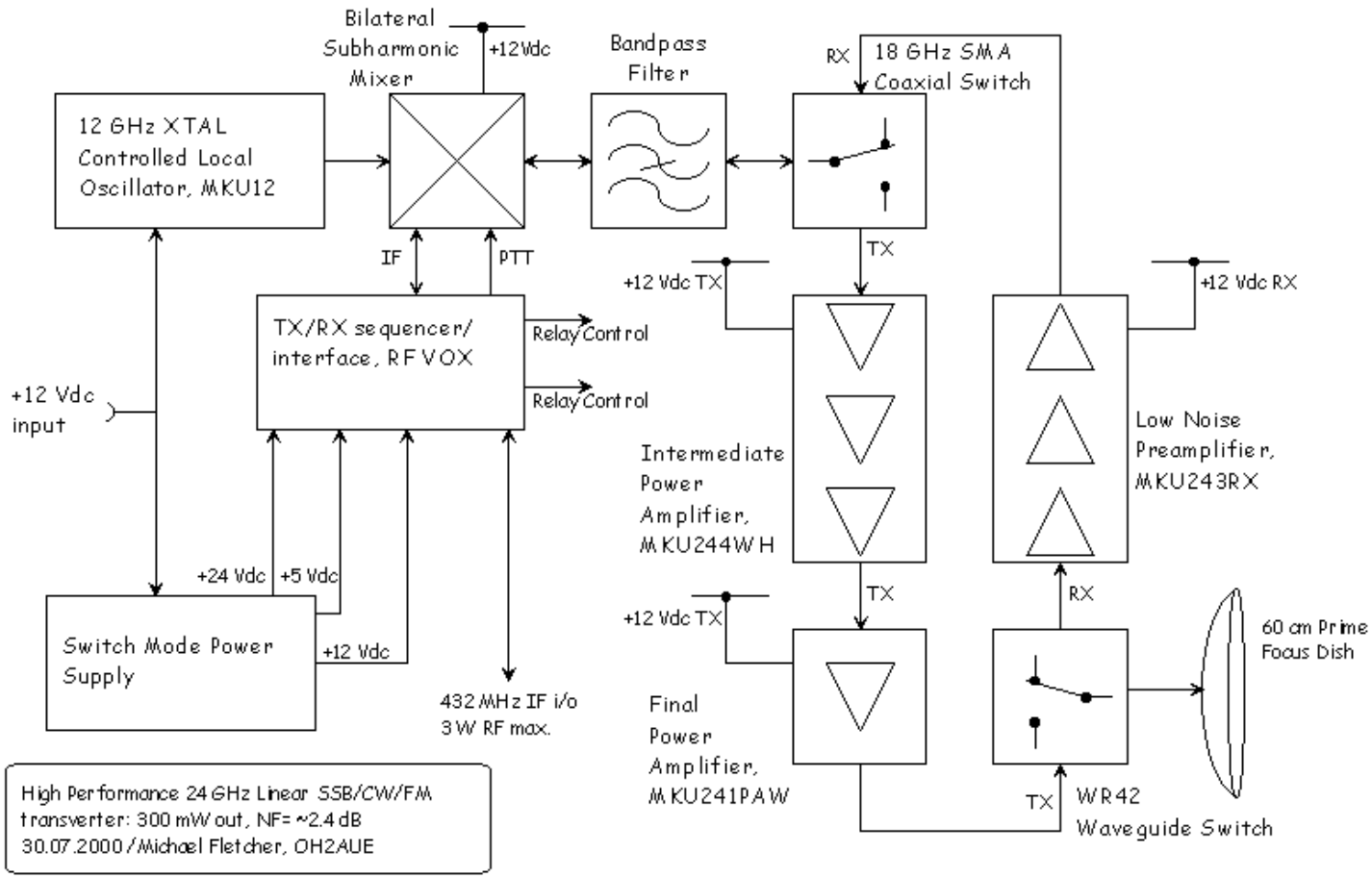

Don’t be intimidated, this is a Transmitter and Receiver ;>.

F6GBQ

I received your message well and i hasten to answer there.For information i have two stations in 24ghz,the first for the portable : DB6NT MKU24g transverter+filter OE9PMJ(cavite)+pa/rx MKU245W 90mw-nf 1.8 + ant 0.90cm offset.

Station nr two is actually my AO-40 rx :DB6NT tranverter MKU24G + filter wave guide WR42 + MKU243W(kit 24ghz 3 x NE 32584C) RX + LO MKU12 (11952mhz) + ant 0.80 disk(lighting penny feed),the angle of opening of tis ant is about at-3db of 1.2/1.3deg,the gain about 42db/iso.

On five stations currently QRV i have contacts DB6NT,G3WDG and he remains me ON4AOD and OH2AUE.

The doppler is very important has this frequency a bout 3/4khz mn.

For my system of poursuit,i use a installation thats turns arond a 68hc11e2,the poursuit makes himself either in automatic by 0.3/0.4°,i using the most often in manual.

The rotor is the kind G800 AZ (10v DC alim) and KR500 EL(24v AC alim),have there surely better HI...

As a matter of principle i use the H polar.

Therefore it is for an explanation of my first QSO's on AO-40.I am at the moment on the modification of the station,solely of quotes it antenna.

I have just finished tests with a new antenna of 0.80cm offset,that give me more satisfactions than with the other 0.80cm disk.

I received the beacon 1 point 1/2 more by report has aerial other.He remains me has install the all on the rotor and make the tightness.

Lighting of the aerial makes himself with a pyramidal small of recuperation on a detector of alarm.

At present i dont't know industrial product of this kind in 24ghz,He as an OM JE1 and HB9 that took out a 24ghz for the tropo.

To your disposition for other question,give me your adress to make follow you of photos facilitie and station.

73 From jean michel near MONTPELLIER south FRENCH
JN13VR, AMSAT NA 21117 F6GBQ

Jean Michael is mailing me some photos – I will post them to the web – see http://s20.w-ent.com/ao40/24.htm

DB6NT

- 24GHz station
  - 90cm Dish on az./el. rotor on home roof
- Owner of Kuhne Electronic
  - Manufacturer of microwave equipment
    - Ham and Professional

W5LUA

AO-40 24048 MHz K Band Operation at W5LUA

At 0715 GMT on October 1, I was able to receive the 24048 MHz beacon from AO-40. AO-40 was situated at an elevation of about 7 degrees and an azimuth of about 265 degrees. I followed the beacon until about 0752 GMT when the elevation of AO-40 was less than 0.5 degree. The beacon peaked at 7 dB over the noise in a 2.4 kHz bandwidth. There was several dB of fading on the beacon. I am using a MACOM 2 ft dish with horizontal polarity at 65 ft (This is my 24 GHz tropo system). Azimuth control is via an M2 rotator with 0.1 degree readout. I can elevate up to 16 degrees with a small actuator. Even though I was not prepared to accurately measure frequency, it appeared to be approximately 24048.081 MHz initially and continuously decreased to about 24048.055 MHz before setting at my QTH. My noise figure measures 3.0 dB with an Agilent Technologies HMMC-5023 LNA mounted at the antenna. My normal sun noise with this system is 3 dB over cold sky.

I use my normal 24192 MHz transverter with some modifications. For 24192 MHz I use a dual conversion scheme which normally down-converts 24192 MHz down to approximately 1994 MHz and then further down-converts to 144 MHz. The dual conversion scheme offers greater image rejection because of the high first IF frequency. When receiving 24048 MHz, the first IF now becomes approximately 1850 MHz which I then pass on to a second mixer with a 1706 MHz LO which then provides the 144 MHz IF.

While listening to the beacon and passband at 24048 MHz, I ran across JA1UK and I had a short QSO with him. I made the assumption that the normal Mode-S passband was also operational at this time so the JA station was probably not aware that I was receiving him on 24048 MHz.

That's a short report from Allen Texas.

Best DX

Al Ward
W5LUA
EM13QC
October 1, 2001

VK5NC & VK5DK

Wednesday, October 03, 2001 11:44 PM

Greetings all, at 1200Gmt 4/10/2001 the K band signal from AO40 was copied at Mount Gambier in South Australia (Grid Locator QF02je) the signal was 6-7db above the noise and the elevation of the satellite was approx 36 degrees elevation and 320 degrees az. The gear here is 600mm dish f/d.5 Home brew receiver based on DB6NTmark 3 mixer and using a 3 stage Pre-amp using fujitsu FHX13 gaas fets. The signal was also heard by VK5DK on his gear which is the same as mine only using a 450mm dish . The test was at the Qth of VK5DG and we were copying the telemetry from AO40 on the 2.4ghz downlink

73 Trevor Niven VK5NC

DB6NT Commercial Equipment

Available in USA from SSB Electronic USA

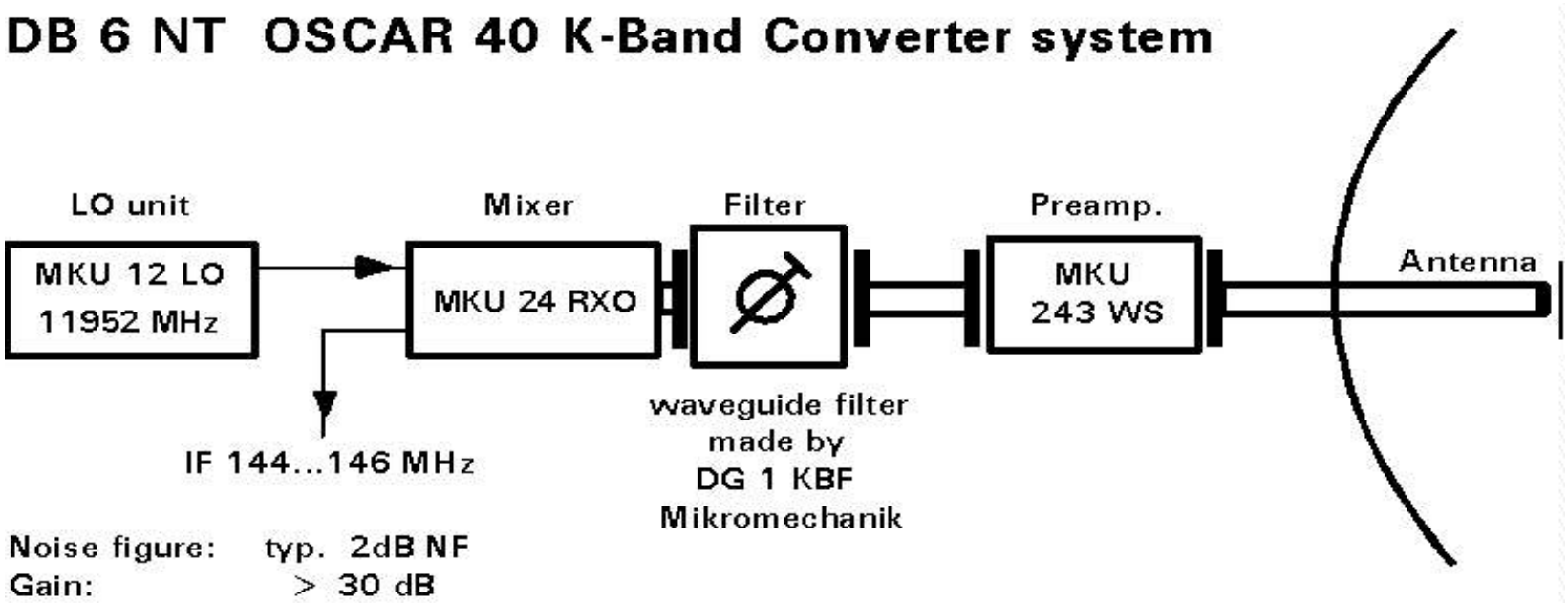

Filter

Picture
N/A

24GHz Dish

Available in USA from SSB Electronic USA

MODEL NO	DESCRIPTION	
SSB-24-001	PROCOM 24 GHz. Parabolic Antenna 36dBd., Dia = 48cm. F/D = 0.4, Completely assembled parabolic dish antenna white coated, with band designation, waveguide, flange and feed horn. SWR at F: Less than 1.25, Opening angle: 2.5 deg.	
SSB-24-002	PROCOM 24 GHz. Parabolic Antenna Dia = 48cm. F/D = 0.4, White coated but without text and without central hole for waveguide feedthrough.	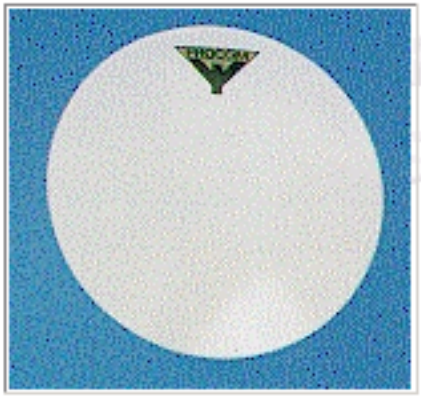

Frequencies & Info

DOWNLINK	Digital	Analog Passband
1.5cm	-	24048.010 - 24048.060 MHz

Note: The K band TX is intentionally designed to be narrowband because of the relatively low output power. The passband is for analogue traffic only. The K band TX passband is Middle Beacon +-25 kHz ONLY. (Michael Fletcher)

BEACON	General Beacon (GB)	Matrix Middle Beacon and "TX Internal"	Engineering Beacon (EB)
1.5cm	-	24048.035 MHz 24048.035 MHz	-

Note: On K band there is ONLY the Middle Beacon. Or more precisely there are TWO middle beacons: the Matrix MB and the yet untested K band TX INTERNAL Middle Beacon (same frequency, same level) (per Michael Fletcher).

Pre-launch Frequency Test

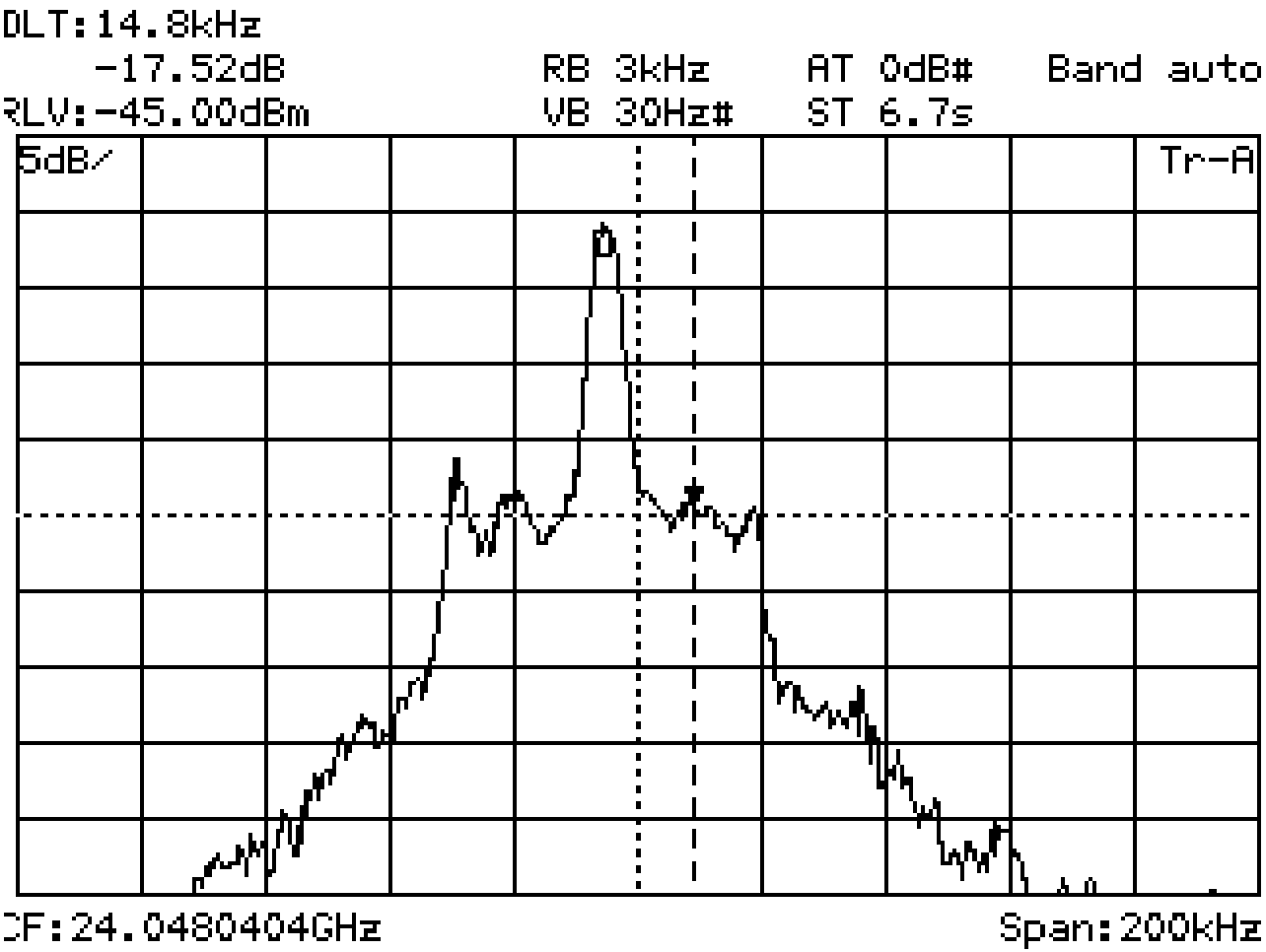

This plot is of the K TX output with only the Middle Beacon and the passband noise of the V band receiver

Links

www.amsat.org/amsat/sats/phase3d/k_tx.html

www.oh2aue.pp.fi/24048.htm

www.ping.be/amsat_on/

www.ssbusa.com/ham.html

www.g3wdg.free-online.co.uk

www.db6nt.com

The End

See handout for answers to common questions
On AO-40 24GHz operation.